Moffitt

NATURAL VENTILATION SOLUTIONS

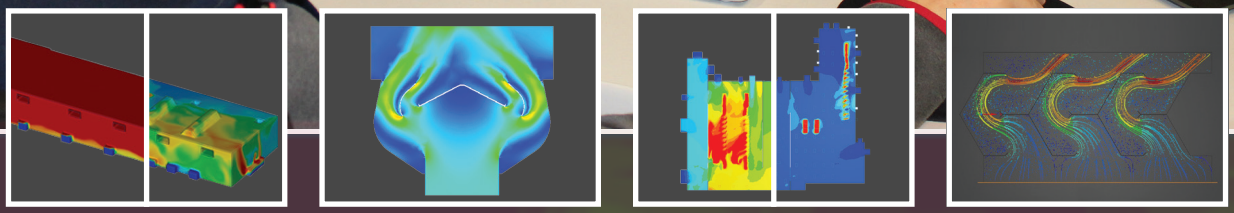

A Computational Fluid Dynamics (CFD) ventilation model shows the flow of air and heat within a building. CFD modeling is especially useful for pinpointing temperatures at different locations and elevations throughout a facility. CFD modeling is used to design more powerful and more efficient ventilation systems.

See our Project Profiles on the back to learn how CFD modeling can help you.

Natural Ventilation · *Natural Heat & Smoke Control* · *Natural Daylight* · *Natural Cooling* · *Natural Intake* · *Heated Ventilation* · *Powered Ventilation* · *Commercial Ventilation*

(800) 474-3267 • MoffittCorp.com • sales@moffittcorp.com

CFD Modeling Process

1.	**COLLECT DATA**	Use customer provided drawings, satellite images, and (potential) site visit to collect data about the facility.
2.	**MODEL BUILDING**	Develop a model of the customer's building that simulates dimensions and spaces within the facility.
3.	**DEFINE HEAT SOURCES**	Approximate building temperatures using simplified and/or combined heat sources and existing ventilation equipment to match the internal heat load and existing ventilation rate.
4.	**PRESENT MODEL**	Present a summary of CFD results via e-mail and/or teleconference.
5.	**REVISE**	Additional model runs provided, (if needed, at cost).

PROJECT PROFILES

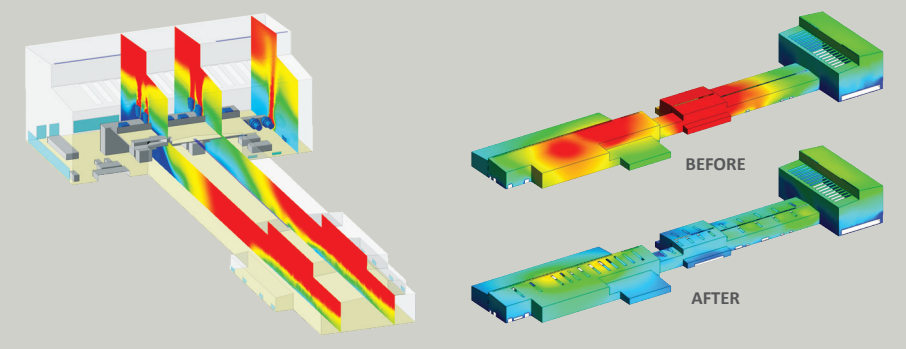

Steel Mill

This CFD model shows how the building's temperature build-ups at the ceiling in the caster deck area.

The model illustrates how the air flows with, and without, the new ventilation system.

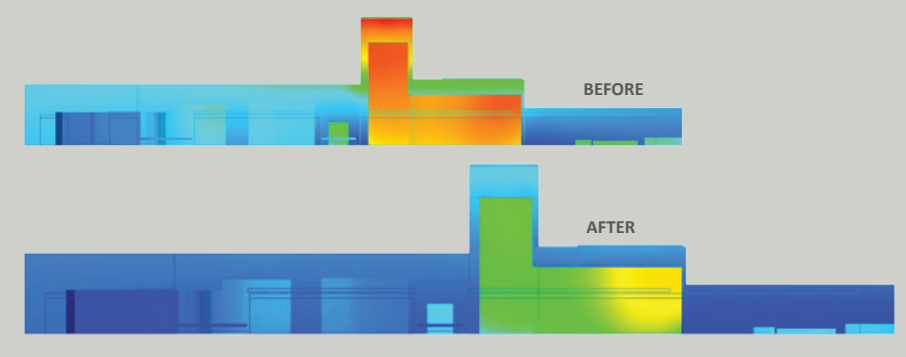

Compressor Building

The "after" model in the compressor building shows a substantial temperature decrease compared to the previously non-vented area.

The model depicts static temperatures, air velocity, pressure level, and thermal stratification to better design for different elevations throughout the facility.

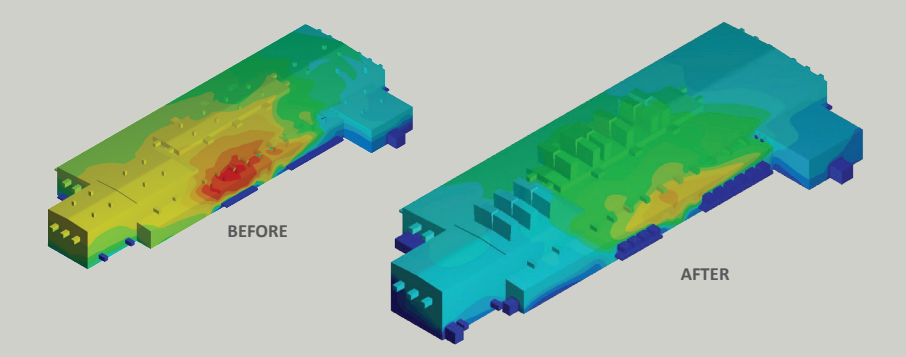

Metal Forge

The "after" model shows the proposed ventilation design which replaces the ineffective exhaust fans with new low-profile ventilators.

The design team used this model to determine the ideal number of wall louvers, as well as the optimal placement for the new equipment.